SPECIFICATION SHEET

TAG _____

Z1473
VENT CAP

Dimensional Data (inches and [mm]) are Subject to Manufacturing Tolerances and Change Without Notice

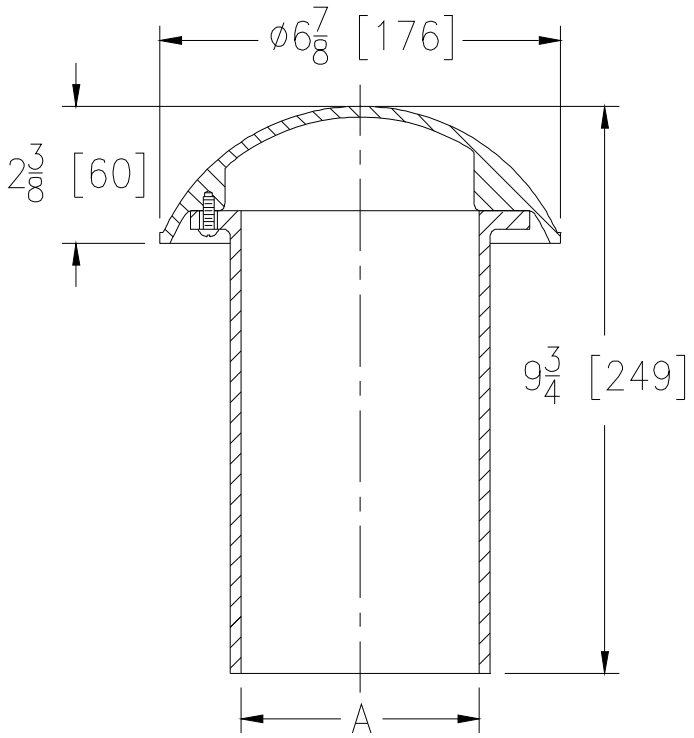

A Pipe Size Inches	Approx. Wt. Lbs. [kg]
4 [102]	4 [2]

ENGINEERING SPECIFICATION: ZURN Z1473
Sanitary Vent Terminal Cap. Dura-Coated cast iron with secured dome.

OPTIONS (Check/specify appropriate options)

PIPE SIZE
4 [102]

OUTLET
____ **SP** Spigot

PREFIXES
____ **Z** Dura-Coated Cast Iron*

SUFFIXES
____ **-G** Galvanized Cast Iron

*REGULARLY FURNISHED UNLESS OTHERWISE SPECIFIED

REV. B	**DATE: 11/8/10**	**C.N. NO. 120271**
DWG. NO. 58786	**PRODUCT NO. Z1473**	

ZURN INDUSTRIES, LLC ♦ SPECIFICATION DRAINAGE OPERATION ♦ 1801 Pittsburgh Ave. ♦ Erie, PA 16514
Phone: 814/455-0921 ♦ Fax: 814/454-7929 ♦ World Wide Web: www.zurn.com
In Canada: ZURN INDUSTRIES LIMITED ♦ 3544 Nashua Drive ♦ Mississauga, Ontario L4V1L2 ♦ Phone: 905/405-8272 Fax: 905/405-1292